M-511.HD Linear Positioning Stage

Hybrid Long-Travel, High-Load Linear Stage with Nanometer Precision

M-511.HD hybrid nanopostioner

- **Simultaneous Control of Piezo-Flexure Drives & DC-Servo/Ballscrew Drives**
- **100 mm Travel Range, 125 mm/sec Max. Velocity**
- **Reliable Execution of Nanometer Level Increments**
- **2 nm Linear Encoder Resolution**
- **Millisecond Settling Time to Nanometer Precision**
- **Frictionless Piezo Drive and Flexure-Decoupled Ballscrew**
- **Active Compensation of Backlash and Stick/Slip Effects**
- **Excellent Velocity Control**

The M-511.HD is an advancement on PI's proven M-5x1 precision micropositioning stage series. The new hybrid system overcomes the limitations of conventional precision positioning systems by combining the well-known advantages of piezo-flexure-drives (unlimited resolution and very rapid response) with the long travel ranges and high holding forces of a servo-motor/ballscrew arrangement. The M-511.HD allows velocities to 125 mm/s with an encoder resolution of 2 nm and load capacity of 50 kg for horizontal operation.

Application Examples

- Surface Inspection
- Microscopy
- Laser technology
- Interferometry
- Metrology

Long Travel Ranges with Nanometer Precision

The challenge of implementing hybrid technology is not only the positioning stage design, but also the use of high-resolution sensors over large travel ranges, the processing of the resulting high-frequency signals and the design of special control algorithms to take full advantage of the hybrid concept.

On the mechanical side, this is accomplished by decoupling the moving platform from the positioner's motor-ballscrew-drive by frictionless flexures and stiff, highly responsive piezo actuators.

Due to its high stiffness and instantaneous, sub-millisecond range response, the integrated piezo flexure drive provides active stick/slip compensation during startup and settling and is the key to achieving consistent and repeatable nanometer level positioning increments. It also cancels out motion irregularities caused by the ball screw and significantly improves velocity control.

Servo-control of the system employs a single high-resolution position feedback sensor (direct metrology) which means that the inherent piezo precision is available over the entire travel range of 100 mm, and longer travel ranges are basically feasible. The resolution and the positioning accuracy mainly depend on the choice of the feedback sensor.

Hybrid Controller Technology is Key to Success

PI's highly specialized C-702 hybrid nanopositioning controller compares the actual platform position (by reading the integrated linear encoder) with a calculated, smooth trajectory in real time. Its complex control algorithms continuously actuate both the piezoelectric and servo motor drives in a way to provide the best possible overall performance.

This makes hybrid systems ideal for applications where extremely smooth motion is required, where the position of an incident needs to be read and refound precisely, or where an externally specified target position needs to be hit within few a nanometers, such as in surface inspection or metrology.

Ordering Information

M-511.HD
Ultra-High-Precision Hybrid Translation Stage, 100 mm Travel, 2 nm Linear Encoder Resolution

Ask about custom designs!

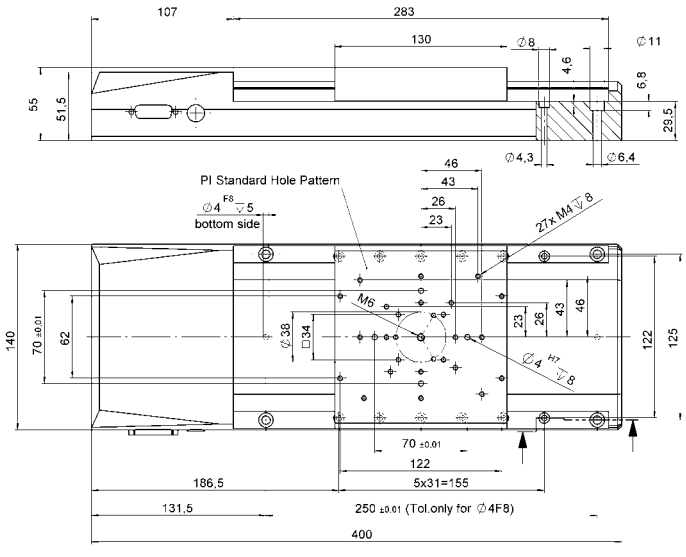

M-511.HD, dimensions in mm. Sub-D connector 26-pin, 3 m cable

© PI 1998-2007. Subject to change without notice. This data sheet is superseded by any new release. The newest release is available for download at www.pi.ws. 07/07/19.0

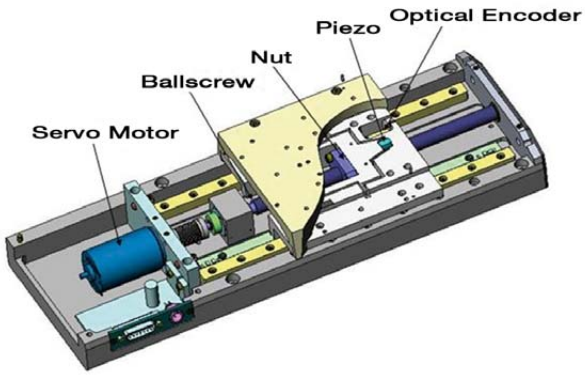

Working principle of the M-511.HD. The platform is decoupled from the motor drive train by the piezo actuator and the flexure guides. This also reduces the inertia of the piezo-driven platform and allows for rapid response

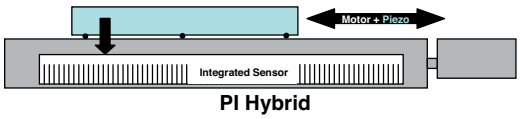

PI Hybrid drive combines motorized and piezo positioning system with integrated, internal, high-resolution sensor in one control loop

Technical Data

	M-511.HD
Active axes	X
Motion and positioning	
Travel range	100 mm
Integrated sensor	Linear encoder
Sensor resolution	0.002 µm
Design resolution	0.002 µm
Min. incremental motion	0.004 µm
Hysteresis at the platform	0.01 µm
Unidirectional repeatability	0.01 µm
Accuracy	<0.05 µm
Pitch	±25 µrad
Yaw	±25 µrad
Straightness	1 µm
Flatness	1 µm
Max. velocity	125 mm/s
Origin repeatability	1 µm
Mechanical properties	
Drive screw	Recirculating ballscrews
Guiding	Precision linear guiding rails, recirculating ball bearings
Screw pitch	2 mm/rev.
Max. load	500 N
Max. push/pull force	80/80 N
Max. lateral force	200 N
Drive properties	
Drive type	Hybrid drive: DC motor with low-inertia, flexure-decoupled and piezo actuated stage platform
Motor type	DC motor
Operating voltage (motor)	24 V
Electrical power	30 W
Piezo drive type	PICMA® Multilayer piezo with flexure
Piezo voltage	±36 V
Limit and reference switches	Hall-effect
Miscellaneous	
Operating temperature range	-20 °C to +65 °C
Material	Al (black anodized)
Mass	5.1 kg
Recommended controller/driver	C-702 hybrid motor controller